Hotmelt Systems

Manual

*exacta*Melt

Hot melt system

UES AG · Breuershofstr. 48 · 47807 Krefeld · Germany
Tel.: 0049-2151-72950 · Fax: 00049-2151-729578 · info@ues-ag.net · www.ues-ag.net

UES AG · Breuershofstr. 48 · 47807 Krefeld · Germany
Tel.: 0049-2151-72950 · Fax: 00049-2151-729578 · info@ues-ag.net · www.ues-ag.net

Introduction

UES hot glue systems meet your highest expectations in terms of quality, labour and production reliability as well as maintenance and user friendliness.
By combining cutting-edge control technology with comfortable and complete features, you have the greatest possible benefit. An extremely compact design and the modular extension option assure variable use for versatile applications.
The UES tank system *"exacta**Melt**"* is equipped with carefully selected components of very high quality. When adhering to these Operating Instructions, a long-term and unlimited use of the device is possible.
Along with a full range of standard applications of adhesive technology with tank systems, hose and gun systems, we also offer individual solutions and system components for special applications in various industrial sectors.
With the adhesive application systems of the "*exacta***Melt**" series, the process is conducted in the context of the hot melt adhesive application. In other words, depending on the application, the adhesive systems are incorporated into production or packaging machines, and, as such, part of the equipment.

In the operation of adhesive application systems for hot melt, the adhesive is processed at high temperatures and with high-pressure material. For this reason, safety precautions are to be taken during installation, operation and maintenance.
In the description of the operation of the system, these safety precautions are marked by safety symbols and, if applicable, further information.
The safety precautions described here refer exclusively to the handling of the adhesive system.
Before commissioning, the operating instructions are to be read in full in order to ensure safety and proper operation. The device owner or operator is responsible for compliance with the safety regulations.

These operating instructions are subject to changes.

UES AG

UES AG · Breuershofstr. 48 · 47807 Krefeld · Germany
Tel.: 0049-2151-72950 · Fax: 00049-2151-729578 · info@ues-ag.net · www.ues-ag.net

Safety Instructions

The following Safety Instructions must be observed!

Caution!

Before any repair and adjustment work, unplug from the mains!


Installation and maintenance work may only be performed by trained personnel.
Only those individuals shall be considered suitable who are qualified by specialised training and experience in dealing with these or similar devices, who know the relevant safety and accident prevention regulations, and who therefore can recognise and avoid hazards.
Work on the adhesive application system may generally only be conducted when the voltage has been turned off and the compressed air has been blocked (depressurise the system).
The system must not be operated without the appropriate covers and safety panels. Be careful of non-covered moving and rotating parts, such as motor and pump shafts, hub and swivelling mechanisms!

Caution!

Do not use the system for anything else than what it was manufactured for!

On many non-covered parts of the applicator device, the hot glue hoses and application guns consist of high temperatures during operation. Hot and pressurised adhesive may cause severe skin burns. Therefore, always wear protective clothing, gloves and safety goggles when working on the system, such as when filling the melting tank or connecting and installing the hoses and valves. Some adhesives produce toxic fumes that have to be extracted. The hot melt adhesive application equipment may not be operated under the following circumstances:

- In the vicinity of volatile substances or explosive materials and gasses
- Without adequate protection
- At temperatures of less than 5 °C or more than 45 °C

Security measures with respect to the adhesive

When working with molten hot glue, always be extremely careful! These materials solidify very quickly, even at high temperatures, so they can still be very hot even in their solid state and can result in burns when in brought into contact with the skin. The safety precautions of the adhesive manufacturer are to be observed. These can be found on the data sheet of the adhesive. Comply with the processing temperatures recommended by the glue manufacturer!

UES AG · Breuershofstr. 48 · 47807 Krefeld · Germany
Tel.: 0049-2151-72950 · Fax: 00049-2151-729578 · info@ues-ag.net · www.ues-ag.net

When working with hot melt, wear gloves, safety glasses and long sleeves to prevent burns. In the case of a burn, do not attempt to remove the glue from a person's skin; instead, hold the wounded site under cold water until the glue has cooled and then contact a physician.

Safeguards with respect to the production machine

For the safety regulations in dealing with the production or packaging machine, please refer to the documentation supplied with these devices.
For installation and maintenance work, the Safety Instructions for the parent machine in which the adhesive application system is installed must be observed.

UES AG · Breuershofstr. 48 · 47807 Krefeld · Germany
Tel.: 0049-2151-72950 · Fax: 00049-2151-729578 · info@ues-ag.net · www.ues-ag.net

Safety symbols

The safety symbols below highlight activities in this manual where increased caution is necessary. The proposed safety precautions should be observed in any case.

Attention, beware of rotating parts

Attention, general safety instructions:
Regards to safety instructions when working with glues and other machines. Additional (special) safety instructions can follow.

Caution hot surface:
Danger of burning. Appliance parts have a high operating temperature.

Caution high voltage:
This type of work is only to be carried out by qualified personnel.

Caution hand injury:
Risk of entrapment if incautiously operated.

Caution, possible danger of uncontrolled release/leakage of hot liquids!

Wear safety gloves!

Use safety glasses!

Disconnect power supplier!

Use face shield!

Disconnect power plug before opening!

Wear protective clothing!

UES AG · Breuershofstr. 48 · 47807 Krefeld · Germany
Tel.: 0049-2151-72950 · Fax: 00049-2151-729578 · info@ues-ag.net · www.ues-ag.net

Example of a hot glue system

(Connecting parts are not supplied with the *exacta***Melt**)

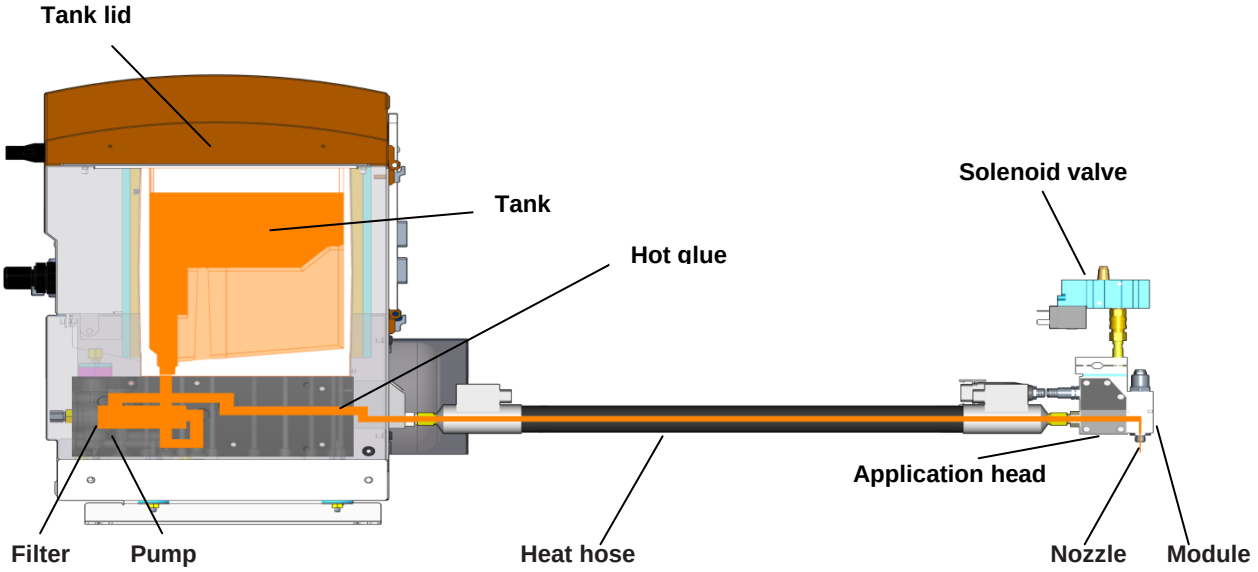

The fuel tank cap closes the tank. After filling, please use the fuel tank cap to close the tank of your *exacta***Melt** system.

The hot glue is melted in the tank. Your *exacta***Melt** has two adjustable heating zones: the tank "t1" and the manifold block "t2" (distribution block to connect the hot glue hoses).

The pump puts the melted glue under pressure and delivers it to the nozzle when the solenoid valve is open.

To prevent contamination in the hoses and application guns, the *exacta***Melt** has a (tank) glue filter.

The hot glue hoses are connected to the glue dispenser. They are heated electrically and are connected with the *exacta***Melt** by a plug.

As an option, an in-line filter can be installed between the hose end and the gun.

The application head is supplied with hot glue via the hose. It is also heated and is connected to the hose electrically.

One or more modules are screwed onto the application head. The modules open and close by air control (via a solenoid valve).

For standard modules, screwable nozzles are necessary. Different nozzles are available for different applications.

UES AG · Breuershofstr. 48 · 47807 Krefeld · Germany
Tel.: 0049-2151-72950 · Fax: 00049-2151-729578 · info@ues-ag.net · www.ues-ag.net

Installation

Checking the components

After unpacking, please check all the components of your *exacta***Melt** and (if applicable) the hot glue hoses and application heads for any damage.

If you notice any damage, please contact UES AG immediately.

*exacta*Melt parts list

- *exacta***Melt** system
- Manual
- Filter wrench
-

Assembly and mounting of the tank system

Warning!
To prevent injury caused by falling, the tank system has to be firmly screwed together with the production machine in any case.

The tank system is equipped with 3 to 4 mounting brackets (depending on the version). These angles have 9 mm holes to secure the tank system with M8 bolts to the production machine. For this purpose, holes that are about 9 mm in diameter have to be drilled in the seat for the tank system of the production machine.

The tank system should be positioned so that an operator is not ergonomically impaired. This particularly applies to settings on the control panel, filling the tank and maintenance work, such as filter changes.

Warning!
Please make sure that, when drilling holes, no cables, pipes or other equipment installations are damaged!

UES AG · Breuershofstr. 48 · 47807 Krefeld · Germany
Tel.: 0049-2151-72950 · Fax: 00049-2151-729578 · info@ues-ag.net · www.ues-ag.net

Connection of the tank system
(necessary connections)

Electrical connection

Warning!
The work may only be performed by qualified personnel.
The power supply has to be interrupted.

- Necessary: 400-V-(3L/N/PE/50 Hz) plug/connection.
- The fuse for each phase cannot be more than 16A.
- As an option, the tank system can be factory fitted with a connection cable. The power supply is connected directly in the control box
- Please only use the provided and designated terminals.
- Only use the lines with the appropriate wire size as a feed.
- For the performance data, please refer to the technical data.

UES AG · Breuershofstr. 48 · 47807 Krefeld · Germany
Tel.: 0049-2151-72950 · Fax: 00049-2151-729578 · info@ues-ag.net · www.ues-ag.net

Rear view of an *exacta*Melt

UES AG · Breuershofstr. 48 · 47807 Krefeld · Germany
Tel.: 0049-2151-72950 · Fax: 00049-2151-729578 · info@ues-ag.net · www.ues-ag.net

Electrical connection

Warning!
Works are only allowed to be conducted by qualified personnel.
The power supply must be disconnected.

For the operation of a UES hot melt system with a gear pump it is compulsory that a complete electrical grounding of the unit as well as an electrical grounding of all components of the gear pump unit has been carried out.

The frequency converter has several Y-capacitors / coupling capacitors which have a connection to the cooling plate and thus to the PE conductor and thus to the ground.
During operation with electric power the converter must be connected to a PE conductor so that the capacitors are short-circuited. Thus the electrical discharge is carried out via the PE conductor.

If the unit is operated via a residual-current-operated protective device (RCD), this device should be > 0,3mA and/or be operated via a short-time delay RCD. Otherwise the RCD could be released. It is recommended to use a combination of an RCD and an automatic circuit breaker so that no other electrical devices are interfered with.

If these safety precautions are not strictly adhered to the diverted current can cause injuries and even death.

Danger!

Dangerous electrical voltage
Earth leakage current (PE) is > 3,5mA AC or > 10mA DC.
Possible consequences: Death or severe injuries when touching the unit in case of an error.

Please adhere to the safety precautions demanded in EN 61800-5-1, especially:
- **Direct connection to the power supply**
- **Carry out the PE-connection compliant to standard (if necessary use 2 PE-conductors)**

UES AG · Breuershofstr. 48 · 47807 Krefeld · Germany
Tel.: 0049-2151-72950 · Fax: 00049-2151-729578 · info@ues-ag.net · www.ues-ag.net

Performance table 4 kg / 8 kg / 14 kg / 20 kg / 30 kg

Product	**Tank size** **Number of possible channels**		
*exacta***Melt**	4-	max. power input	3150Watt // 1000Watt per channel
*exacta***Melt**	8-	max.power input	3150Watt // 1000Watt per channel
*exacta***Melt**	14-	max.power input	4450Watt // 1000Watt pro Kanal
*exacta***Melt**	20-	max. power input	6300Watt // 1000Watt per channel
*exacta***Melt**	30-	max. power input	6930Watt // 1000Watt per channel

UES AG · Breuershofstr. 48 · 47807 Krefeld · Germany
Tel.: 0049-2151-72950 · Fax: 00049-2151-729578 · info@ues-ag.net · www.ues-ag.net

Terminal block X1 control contact

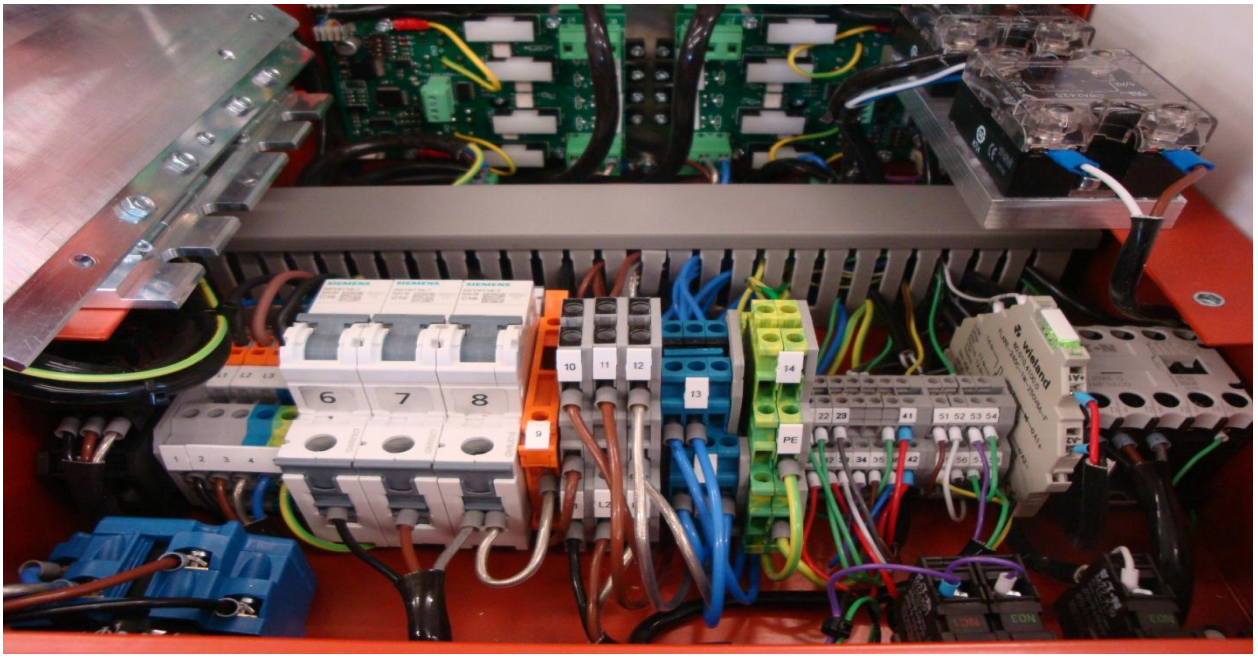

power supply and digital in-/output

(please see attachment electric circuit plan page 12)

Assignment 400V input supply voltage	
L1,L2,L3/N/PE 400V50Hz	
L1	external conductor 1
L2	external conductor 2
L3	external conductor 3
N	neutral conductor
PE	protective conductor

Assignment control contact X1	
21/22	Ready (potential free) DO
31/32	Alarm (potential free) DO
23/35	Level sensor (potential free) DI
41/42	Level control (potential free) DO
K1 7/8	System switched on (potential free) DO
23/33	System start / stop (potential free) DI
23/34	Standby start / stop (potential free) DI
51/52	External pump control with option 2
53/54	External control voltage (Gear-to-line) 0-10V

UES AG · Breuershofstr. 48 · 47807 Krefeld · Germany
Tel.: 0049-2151-72950 · Fax: 00049-2151-729578 · info@ues-ag.net · www.ues-ag.net

Hose connection

UES hot melt systems are fitted with 8 gluing nipples and electrical connectors. The connectors are labelled according to the channel numbering in the controller. Insert the plug of the hose into a connector. UES hot melt systems and accessories can be fitted with various types of connectors. When connecting a hose, the sealing cap must be unsrewed using a SW 19 open-end wrench. In order to secure the hose, the nipple must be held by using a SWW 17 open-end wrench.

Attention!
Once the system reached the operation temperature please check once again the secure lock of the hose. Tighten it again if necessary.

Always keep in mind that gluing nipples and manifold are very hot!

UES AG · Breuershofstr. 48 · 47807 Krefeld · Germany
Tel.: 0049-2151-72950 · Fax: 00049-2151-729578 · info@ues-ag.net · www.ues-ag.net

Application head connection

The glue connection nipple on the application head has to be connected to the hose connection nipple on the hose. You will also need an SW 19 wrench.
The electrical connection is established by inserting the plug located on the application head into the socket located on the glue hose.

Warning!
Make sure that there is an absolutely tight connection between the system, the hoses and the guns via the screwed glue nipple. Otherwise, any escaping glue can lead to severe burns.

Pneumatic components are designed and constructed according to the applicable standards and calculations such that, under the intended conditions of use, rupture or failure due to fatigue or wear is not expected to occur.

UES AG · Breuershofstr. 48 · 47807 Krefeld · Germany
Tel.: 0049-2151-72950 · Fax: 00049-2151-729578 · info@ues-ag.net · www.ues-ag.net

Filling in the glue

Now, the system is set up according to your requirements. Fill the tank now, please.

- Do not leave the glue supply standing open, store it in closed box/repository only.
- The tank cover should be able to be opened without giving foreign bodies such as paper slips the possibility to fall inside.
- Before commencing with filling, the glue supply has to be checked on cleanliness.
- Do not overfill the tank. Carefully fill the adhesive up to 20 cm below the tank opening.
- After you have finished filling close the tank cover. Thus you can cut the risk of foreign objects falling in or glue steam escaping.
- The tank cover should be able to be closed without coming into direct contact with the glue.
- Don't let the unit run dry. In the case of too little glue being in the tank, the problem of punctiform overheating can arise and can consequently cause operation disturbances due to glue burns and sediments.
- Please take notice of your glue supplier's operation manual and set your unit adequately.

Attention!

While refilling the glue injuries due to spraying glue can occur.

Take notice of the safety measures when working with hot melt glue!

Do not mix different adhesives with each other!

UES AG · Breuershofstr. 48 · 47807 Krefeld · Germany
Tel.: 0049-2151-72950 · Fax: 00049-2151-729578 · info@ues-ag.net · www.ues-ag.net

Service
(general)

Our *exacta***Melt** is equipped with a touch-sensitive 4.3" colour touch display. You will be guided through the menu intuitively. If you wish to enter data, touch the screen at the desired location and enter your values via the input field. Confirm this by pressing ENTER. The display then automatically jumps back to the so-called Overview after a few seconds. All the important information is displayed here during operation.

UES AG · Breuershofstr. 48 · 47807 Krefeld · Germany
Tel.: 0049-2151-72950 · Fax: 00049-2151-729578 · info@ues-ag.net · www.ues-ag.net

In addition, the *exacta***Melt** has a rotary adjustment knob. Turn the knob until the desired number is entered. By pressing the knob, this field is activated. Now activate the input field. Now set the desired value by turning the knob again. Confirm this value by pressing the knob again. Through these two methods, you can make your entries quickly, easily and intuitively.

Through the menu, you will be informed about the current settings via our **traffic light system**. In the heating phase, the corresponding fields are entered in **yellow**. The percentage of colouring of these fields provides information on the heating progress. Once all the temperatures have been reached, these fields are displayed in **green**. As soon as the ready signal is activated, the entire display switches to **green**. You can therefore already see from a distance that your system is ready. If there is still a problem, the corresponding area is displayed in **red**. Here, as well, the entire display will change after a few seconds and turn **red**. This allows you to see from a distance that something is wrong.

Warning!

Never use sharp objects to adjust the touch panel. This could lead to irreparable damage.

Likewise, the display can be damaged if too much pressure is used when entering data.

Always keep the screen clean so that you can enter data without any problem.

UES AG · Breuershofstr. 48 · 47807 Krefeld · Germany
Tel.: 0049-2151-72950 · Fax: 00049-2151-729578 · info@ues-ag.net · www.ues-ag.net

Commissioning
Quick start

In order to be able to work with your *exacta***Melt**, you only need a few steps to put it into operation. All the parameters are pre-set so that you only have to adjust the values to your requirements. You have made all the electrical and pneumatic connections and connected your peripherals.

Now, turn on the *exacta***Melt** with the main switch. The system is now in the **off-line mode**. Touch the screen in the middle of the switch symbol until the system jumps to the **on-line mode**.

You can also turn the system on via the rotary adjustment knob. Press it until the system switches to the **on-line mode**. After a few seconds, the display jumps to the Overview display. Set the appropriate temperature tank by tapping on the Tank Temperature field.
This opens the input window. Here, enter your value and confirm your entry with Enter. Then, set the temperatures for each channel that you need. You either enter this area by using the "down arrow key" or the Overview by touching the Channel temperatures field. Here, activate the hose and the application head and set the corresponding temperatures. At the end, confirm your entries with ENTER. The system starts to **heat up** the individual temperature ranges.

Once the temperatures have been reached, the **READY signal** will be activated**.** (Please adjust a suitable pump rotation via the touch control panel now.) This last step is not necessary for a Gear-to-line" operation.

Your system is ready!

UES AG · Breuershofstr. 48 · 47807 Krefeld · Germany
Tel.: 0049-2151-72950 · Fax: 00049-2151-729578 · info@ues-ag.net · www.ues-ag.net

Individual settings

Menu structure = Settings

The settings consist of 4 fields, which are constructed as follows.

In these areas, you can customise your settings and adapt them to your needs.

Caution!

In the setting area, you can define your settings simply by using the rotary adjustment knob. At the end of the settings, you need to save these settings/changes by clicking on the icon.

If you leave the area without saving, your entries will be lost.

The previously pre-set parameters apply.

UES AG · Breuershofstr. 48 · 47807 Krefeld · Germany
Tel.: 0049-2151-72950 · Fax: 00049-2151-729578 · info@ues-ag.net · www.ues-ag.net

Menu overview

Pump

Menu item	Setting	Description	Standard values
Piston pump	Dea / Man / Auto	Deactivate / Manual / Automatic	Auto
Delay [min.]	0-120 min	Pump released only after the delay time	0
Turn on manually	Off / On	Activating the pump only possible in manual mode	off
Gear pump 1	Dea / Man / Auto	Deactivate / Manual / Automatic	Deactivate
Delay [min.]	0-120	Pump released only after the delay time	0
max. speed [U/min]	0-90	Maximum speed	0
Pressure sensor 1	Off / On**1**	The pressure is displayed in the pump display, however, it is independent of the chosen pump **1/2**	Off
Gear pump 1 Turn on manually	Off / On	Activating the pump only Possible in manual mode	Off
FU 1	Off / On	Activating / Deactivating FU 1	Off
Gear pump 2	Dea / Man / Auto	Deactivate / Manual / Automatic	Deactivate
Delay [min.]	0-120	Pump released only after the delay time	0
max. speed [U/min]	0-90	Maximum speed	0
Pressure sensor 2	Off / On**2**	The pressure is displayed in the pump display, however, it is independent of the chosen pump **1/2**	Off
Gear pump 2 Turn on manually	Off / On	Activating the pump only possible in manual mode	Off
FU 2	Off / On	Activating / Deactivating FU 2	Off

In this menu section, you can change all settings related to the pump. From the selection of the pump via delays to switching on manually for maintenance purposes.

Warning!

When the pump is activated and the housing flap is open, there is a danger of jamming at the moving parts.

Therefore, when the housing flap is open, always turn off the pump.

UES AG · Breuershofstr. 48 · 47807 Krefeld · Germany
Tel.: 0049-2151-72950 · Fax: 00049-2151-729578 · info@ues-ag.net · www.ues-ag.net

Options

Menu item	Setting	Description	Standard values
Setting time / date	xx:xx xx:xx:xxxx	current time current date	all values are on 00:00
Timer	Mon.-Sun. On-Standby-Off	Input of the starting time-pause-stopping time	please read note ***1**
Timer On / Off	Off / On	activate, deactivate the timer	0
Standby	Off / On	activate / deactivate the standby	0
Standby reduced temperature [°C]	0-100	Reduction of the set temperature	30
Standby time [min.]	0-120	Duration of the reduction	60
Language	Ger / Eng / Ita	Menu language	Eng
PowerFill	On / Off	activate / deactivate the PowerFill	On
PowerFill min. time [sec.]	0-15	Min. filling time	8
PowerFill max. time [sec.]	0-180	Max. filling time after the end of the alarm	0
		0 min. = Alarm off	

In this menu section, you can adjust the settings related to the language, date and time, from the current time to the weekly program, incl. the standby times and temperatures.

***1 note:** When the Off-time is deactivated in the timer and it is set on “Off” then the switching function does not work.

This is for a multi-shift operation beyond the hour 23:59. The unit will then be deactivated at the Off-time which has been set next.

UES AG · Breuershofstr. 48 · 47807 Krefeld · Germany
Tel.: 0049-2151-72950 · Fax: 00049-2151-729578 · info@ues-ag.net · www.ues-ag.net

Service

Menu item	Setting	Description	Standard values
Sensor type	NI120/PT100/NTC/FeCu	Selection of the sensor type of the channels	NI120
Max. temperature [°C]	0-195 °C (0-250 °C high temperature unit)	Max. permissible heating temperature	195 °C
Max. over-temperature [°C]	0-210 °C (0-270 °C high temperature unit)	highest permissible temperature before the alarm sounds	210 °C
Warning temperature [°C]	-8 / +10	Deviation from the target value	10
Temperature of the system	°C / °F	Setting Celsius or Fahrenheit	°C
Start hose [%]	0-100	Engagement of the hose heater to X% of the tank temperature	80
Start head [%]	0-100	Engagement of the head heater to X% of the hose temperature	80
Maintenance date	xx:xx:xxxx	next maintenance	Current + 0,5 year
Maintenance time	0-4000	Operating hour meter until the next maintenance	2000
Alarm memory	0-99	99 Alarm messages	
Operating times	Tank - Hoses - Heads	Operating hour meter of the connected channels PW7873	
CPU Temperature [°C]	0-65	current CPU temperature	30 °C
Software version	1.0	Software Update PW2401	
Temperature difference	-30 / +30	difference between tank and manifold/ pump ***1**	0 °C
Password Temp. Parameter	1507	Protects the temperature settings	Off
Password Service	7873	Protects the service settings	On
Alarm/ Ready display	On / Off	Turning off the entire screen display **Green** / **Red**	On
Activate format	On / Off	activate/deactivate the format setting	On
Quantity channel boards	1-4	activate/deactivate the channel boards	1
Tank 2 Heating lower limit	-10 - (-99)	Setting the negative temperature difference for T2 without losing the Ready signal ***2**	-10
Tank 2 Heating upper limit	8 – 99	Setting the positive temperature difference for T2 without losing the Ready signal ***2**	8

UES AG · Breuershofstr. 48 · 47807 Krefeld · Germany
Tel.: 0049-2151-72950 · Fax: 00049-2151-729578 · info@ues-ag.net · www.ues-ag.net

In this menu section, you can change all temperature settings. From sensor type to password protection, settings can be made here.

***1 note:** The set tank temperature (T1) refers to the tank. With the parameter „Temperature difference“ you can set the required temperature for manifold/pump by setting the temperature difference to Tank (T1).
→ for example**:** Tank = T1 150 °C, difference + 20 °C
→ means 170 °C set temperature for manifold/pump

***2 note:** The purpose of this feature, **especially for large tanks,** is to compensate the lowering of the temperature when new granulate is filled into the unit, so that the Ready signal remains.

UES AG · Breuershofstr. 48 · 47807 Krefeld · Germany
Tel.: 0049-2151-72950 · Fax: 00049-2151-729578 · info@ues-ag.net · www.ues-ag.net

Caution!

All the parameters of your system have been pre-set as they are needed. Only change these parameters in consultation with a service technician. An incorrect setting could cause considerable damage to or even a total loss of your system.

Format

Menu item	Setting	Description	Standard values
Status Format	On / Off	activate / deactivate the format	Off
Quantity channel boards	1-4	activate/deactivate the channel boards	1
Format selection			

	CH1	CH2	CH3	CH4	CH5	CH6	CH7	CH8	
F_A									0
F_B									0
F_C									0
F_D									0
F_E									0
F_F									0

- In this menu section, you can change all settings relative to the necessary formats.
- You have the option to pre-set up to 6 formats, with up to 8 channels.
- Select the channels that you need for your format.
- Switch between the formats to activate the other channels.
- The standard setting is F_A CH1.
- When you turn on the system, Channel 1 is always activated until the settings are changed.
- Activate the Status / Format with ON. If you switch the Format to ON, you can directly reach the format setting in Overview by tapping on the Format field.
  Here, you can now easily switch between pre-set formats.
- A format can be activated in the background via the Format Plus process. That means that the required channels will be heated in the background. When the set temperature has been reached, the new format can be activated without any time being wasted.
- This format can also be selected via the RS 485 interface.

Caution!
If you disable the individual channels over the temperature setting, you will automatically be activated via the format after the system is turned off.

UES AG · Breuershofstr. 48 · 47807 Krefeld · Germany
Tel.: 0049-2151-72950 · Fax: 00049-2151-729578 · info@ues-ag.net · www.ues-ag.net

Motor control

The strip terminal X1 for the pump control is located in the control box.

Motor release

Start and stop. The motor will be started when the contact (1/2) is closed. From the factory the system is equipped with a jumper (Fig. above).

Motor release with electrical release

Start and stop the pump motor. When pulling the trigger of the hand gun the contact (51/52) is closed and the motor will run (Fig. below).

Speed control

In automatic mode a master voltage (0-10 VDC) is required, on which the speed depends. The rotation speed is shown on the display of the frequency converter and on the display of the system.

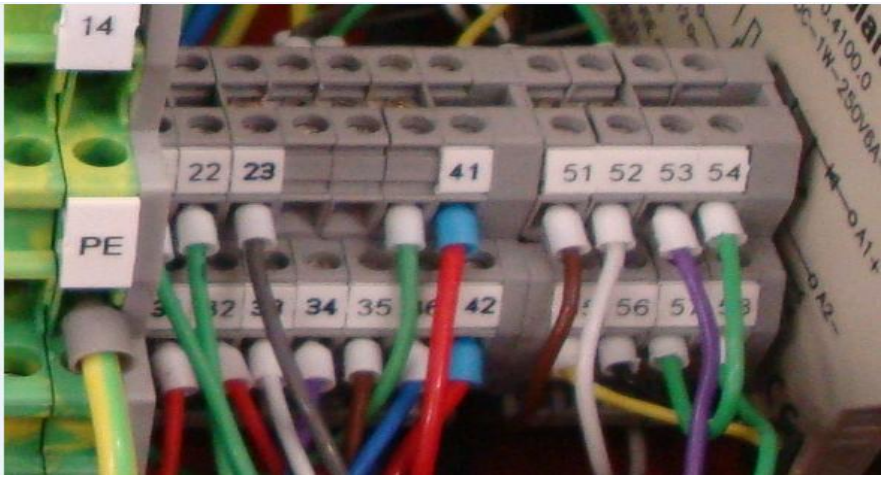

Contact	Function	Evaluation
51/52	Motor release	1 = Motor start
53 /54	external speed control	0V = min. speed 10 VDC = 60 U/min

Warning!

Before removing the front panel, the power plug has to be disconnected and the system must be de-energized.

Check with a suitable tester.

UES AG · Breuershofstr. 48 · 47807 Krefeld · Germany
Tel.: 0049-2151-72950 · Fax: 00049-2151-729578 · info@ues-ag.net · www.ues-ag.net

Selecting the operating mode of the pump

The following operating modes are possible

Option 1
Speed control via touch screen

Option 2
Speed control via potentiometer (R1) or external voltage 0-10V – Gear-to-line – as well as external pump control ON/OFF.

Attention!

The factory setting of the *exacta*Melt is option 1.

To switch to option 2, proceed as follows:

1. Switch off the system by pressing 

2. Press symbol △ „Arrow up“

UES AG · Breuershofstr. 48 · 47807 Krefeld · Germany
Tel.: 0049-2151-72950 · Fax: 00049-2151-729578 · info@ues-ag.net · www.ues-ag.net

3. Press “pumps”

4. Deactivate piston pump – Change the parameter from „AUTO“ to „DEA“ and additionally activate the parameter “gear pump 1” by changing from „DEA“ to „AUTO“

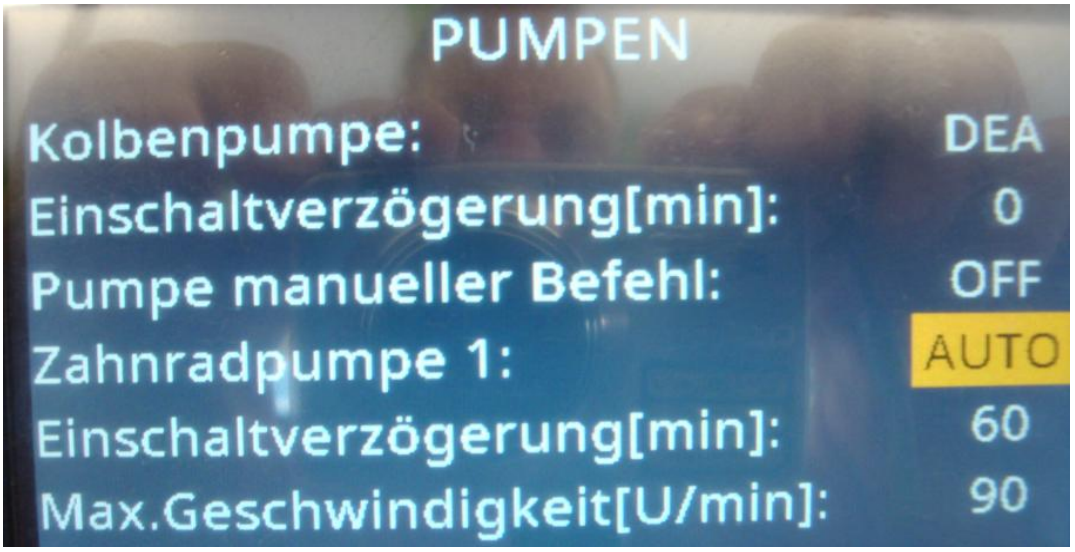

UES AG · Breuershofstr. 48 · 47807 Krefeld · Germany
Tel.: 0049-2151-72950 · Fax: 00049-2151-729578 · info@ues-ag.net · www.ues-ag.net

5. Save everything by pressing the floppy disk icon!

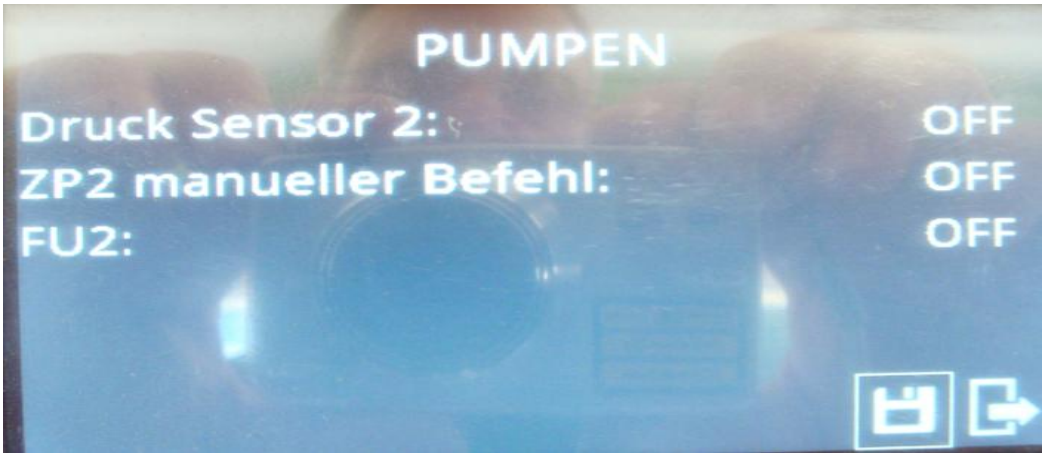

6. Exit the „pumps“ menu by pressing the arrow key ▽ „Down arrow“

UES AG · Breuershofstr. 48 · 47807 Krefeld · Germany
Tel.: 0049-2151-72950 · Fax: 00049-2151-729578 · info@ues-ag.net · www.ues-ag.net

7. Switch on the *exacta***Melt** again by pressing 

Thus the change to option 2 has been completed and the pump is now controlled by the components shown in the photo below.

UES AG · Breuershofstr. 48 · 47807 Krefeld · Germany
Tel.: 0049-2151-72950 · Fax: 00049-2151-729578 · info@ues-ag.net · www.ues-ag.net

Additionally the following connectors on the terminal block are activated for the external control.

Connector 51 + 52 = external pump control ON/OFF
Connector 53 + 54 = external control 0-10V

Switching back to option 1 is possible again by revesing the previons steps. After that the speed control of the pump is only possible via the touch panel

and all other components - as described in option 2 - are deactivated.

Please note!

A combination of option 1 and option 2 is not possible!

UES AG · Breuershofstr. 48 · 47807 Krefeld · Germany
Tel.: 0049-2151-72950 · Fax: 00049-2151-729578 · info@ues-ag.net · www.ues-ag.net

Filling level control

UES *exacta***Melt** is equipped with a fillilling level control in the tank as standard. When the glue level falls below 20% the signal contact is made and the LED “Fault” flashes. The contact can be tapped from the main board to control an audible signal for example. The operation of the unit is not affected by this in any case.

Filling level sensor in the tank

UES AG · Breuershofstr. 48 · 47807 Krefeld · Germany
Tel.: 0049-2151-72950 · Fax: 00049-2151-729578 · info@ues-ag.net · www.ues-ag.net

Adjusting rotation speed and pressure

By using *exacta***Melt** systems with a gear pump the amount of adhesive to be transported is controlled by the rotation speed of the gear pump and the system pressure (bypass adjustment).

Switch pump off (0)/on (1)

- With this switch the pump is activated or deactivated, however, ot started yet!

Switch Hand/Auto (manual/automatic)

- Hand (manual): The pump is started manually. Moreover the pump can be started via the external pump control X1 (see terminal assignment).
- Auto: The pump is started automatically (e.g. by a superordinate controller/SPS or a set contact).

Attention!
Incorrect settings may cause serious accidents and destroy the system. Factory setting: 30 bar!

UES AG · Breuershofstr. 48 · 47807 Krefeld · Germany
Tel.: 0049-2151-72950 · Fax: 00049-2151-729578 · info@ues-ag.net · www.ues-ag.net

Potentiometer (RPM):

- Hand manual (Option 2): direct control of the rotation speed.
- Auto: Set the maximum motor rotation speed by use of the potentiometer. The needed speed will be adjusted by the external controller via the 0-10 VCD control voltage. The rotation speed is shown on the control panel.

Adjusting the pressure

- The pressure of the system can be adjusted by altering the return valve (bypass). To ensure a smooth operation we set the pressure to an optimal value. Please contact our service before altering the valve.
- To increase the pressure turn the valve clockwise, to decrease turn it counter clockwise.

Attention!
Incorrect settings may cause serious accidents and destroy the system. Factory setting: 30 bar!

UES AG · Breuershofstr. 48 · 47807 Krefeld · Germany
Tel.: 0049-2151-72950 · Fax: 00049-2151-729578 · info@ues-ag.net · www.ues-ag.net

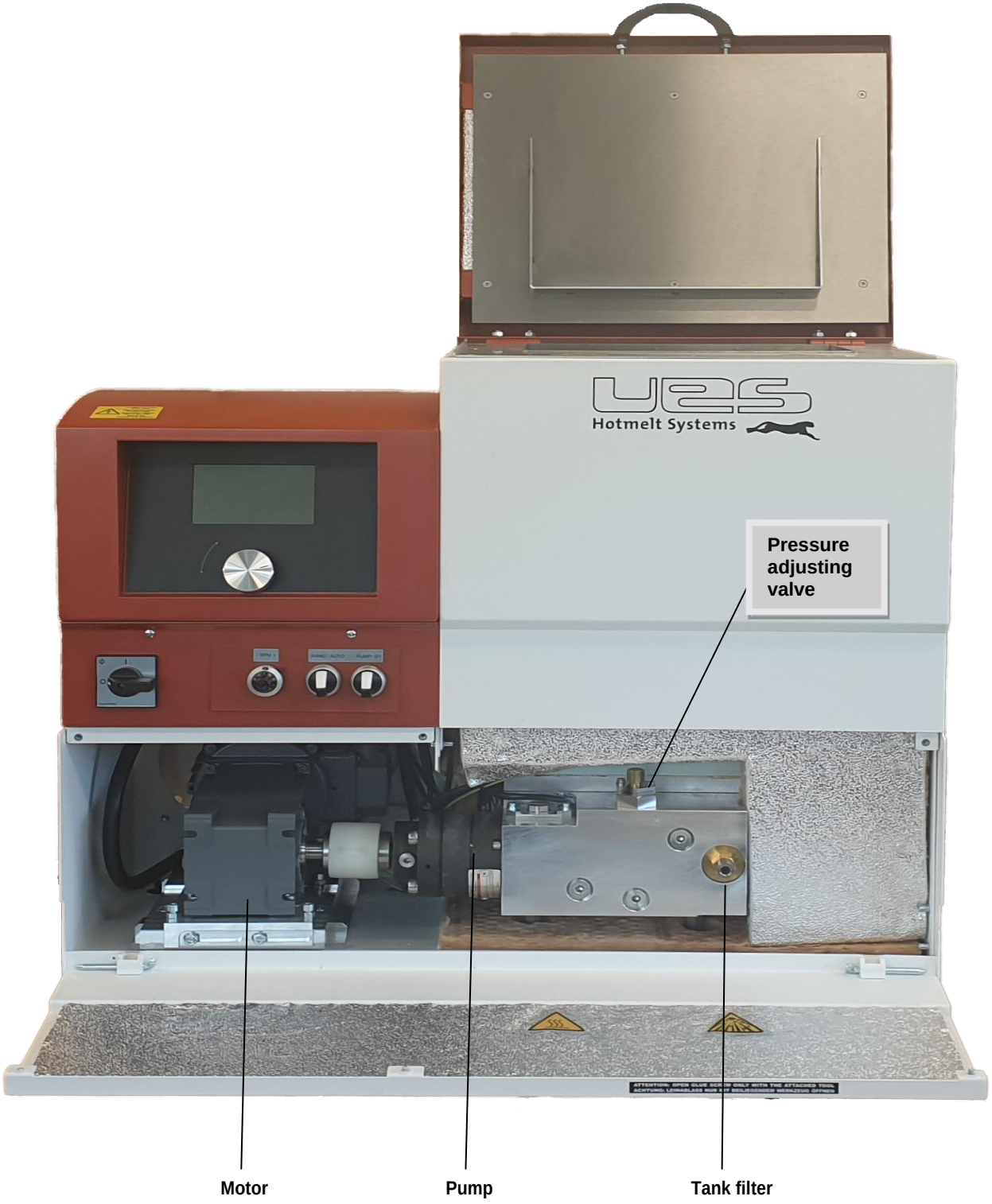

UES AG · Breuershofstr. 48 · 47807 Krefeld · Germany
Tel.: 0049-2151-72950 · Fax: 00049-2151-729578 · info@ues-ag.net · www.ues-ag.net

Standby (temperature reduction)

Temperature reduction for all zones during production breaks.
You have adjusted your parameters regarding standby functions in the settings.

Caution!
They represent the respective difference temperatures compared to your target temperatures!

For longer downtimes, you can activate the standby function, thereby protecting your system as well as the adhesive.

What opportunities do you have to use the standby function?

Manual	• The standby button is located on the right side in the overview. • This activates and deactivates standby. • When you activate standby, an entered time expires and standby is automatically disabled.
Timer	• The standby times are recorded in your timer program (week program).
Remote	• A superordinate control (e.g. SPS) activates and deactivates standby.

You would like to set the parameters for Standby (temperature reduction)

- You reach the setting level over Settings / Options / Standby.
- You can make your entries with the one-hand safety input wheel.
- Save the change at the end of the menu.

Temp
Differential temperature (by how many degrees do you want to reduce the temperature?)

Time
Do you want a manual reduction followed by an automatic heating after a certain time? If so, set a time. After the set time, the standby function is disabled and your system heats up. If not, then set the time to 0 min. In this case, the standby function is to be deactivated manually.

Remote
You can also use the standby function with a superordinated controller (see interface signals). The drive is always superordinated, so when Signal Standby "On" is active, the aforementioned functions will not be taken into consideration.

Manual activation / deactivation of Standby
By pressing the standby button, the function is activated / deactivated and the system reduces or raises the temperature accordingly. The Standby LED goes out.

UES AG · Breuershofstr. 48 · 47807 Krefeld · Germany
Tel.: 0049-2151-72950 · Fax: 00049-2151-729578 · info@ues-ag.net · www.ues-ag.net

Maintenance

Caution!
All work is to be performed only in a voltage-free and unpressurized state and by qualified personnel.

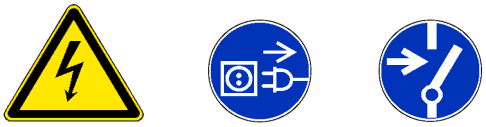

When performing maintenance work, the following precautions should be observed:

- Do not conduct any inspection or adjustment work without a second worker being present who can provide immediate help in the event of an accident!
- Disconnect the power supply before opening the cabinet or removing the electrical components!
- Before performing maintenance work, remove any jewellery, such as rings, watches, necklaces, bracelets, etc.!
- If possible, stand with your feet on an insulated rubber carpet and avoid working on wet or damp floors!
- Always wear safety glasses, protective gloves and protective clothing that covers those parts of the body that can be reached by splashes of hot adhesive or that come in contact with hot parts!
- Set the operating pressure of the adhesive to zero before performing any work! In addition, the pump is shut down and drained by opening the application valves of the pressurised adhesive.
- To clean the spray nozzles, do not use any open flames, sharp objects or needles, because these could damage the nozzles!
- If adhesive begins to leak out, stop operation immediately!
- Only use original spare parts!

Before cleaning, the system should be completely drained and heated up. Hoses and nozzles are only to be connected or removed when warm.

Never use hard tools to remove the melted adhesive in the tank; this could damage the non-stick coating.
The cooled hot melt adhesive can normally be easily peeled from the walls of the melting tank.
If necessary, only use a wooden spatula.

The UES TANK SYSTEMS correspond to the state of adhesive technology and have a variety of special features that simplify daily work with hot glue and contribute to highly reliable production.

Attention!
In the case that the pump must be dismounted from the hot melt applicator the system must be completely emptied before!

If this is not followed it could result in serious injuries due to trailing glue!

UES AG · Breuershofstr. 48 · 47807 Krefeld · Germany
Tel.: 0049-2151-72950 · Fax: 00049-2151-729578 · info@ues-ag.net · www.ues-ag.net

Changing the filter

Before changing a filter the operation procedure “Releasing the pressure” should be carried out!

The following steps are to be carried out:

- Set the tank temperature and wait until the required temperature is displayed.
- Pull the complete filter out of the manifold.
- Check the filter for damage or contamination.
- Exchange the tank filter either with a new or cleaned filter.
- Replace the tank filter by reversing the procedure described above.

Complete filter - 016026

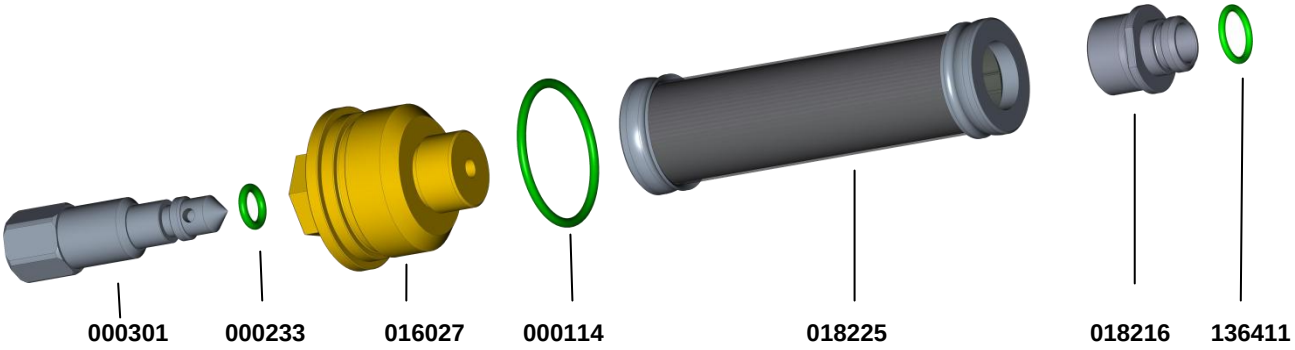

Complete filter disassembled

UES AG · Breuershofstr. 48 · 47807 Krefeld · Germany
Tel.: 0049-2151-72950 · Fax: 00049-2151-729578 · info@ues-ag.net · www.ues-ag.net

System without pressure

Before conducting all maintenance and repair work on adhesive application systems, the system must be "completely depressurized".

As soon as the pump is set to „0 revolutions or deactivated, the glue pressure gradually reduces. The pressure is returned to the tank via a bypass. The time until the pressure has been released completely depends on the medium which has been filled into the tank.

Because remaining glue should drain off the system, the unit has to be heated for the following steps:

- Stop the pump(s).
- When the pump is idle the pressure drops. Wait 2 minutes until the complete pressure is released.
- Remove nozzles from gun.
- Place a collection container under the respective position of the gun.
- The manual release of the magnetic valve should be operated and held until there is no more glue coming out of the guns.
- Place the collection container under the drain valve at the manifold.
- Remove the filter cover and open the drain screw to release the residual pressure out of the manifold.

UES AG · Breuershofstr. 48 · 47807 Krefeld · Germany
Tel.: 0049-2151-72950 · Fax: 00049-2151-729578 · info@ues-ag.net · www.ues-ag.net

Basic cleaning

- Drain the old glue via the tank filter.
- Loosen coarse debris from the tank by using a wooden spatula. If the contaminants are very strong, please contact UES AG for information on alternative cleaning options. Fill new glue into the tank and set the temperatures for the material hoses down to about 90 °C so that the glue becomes more viscous.
- Loosen the hoses from the heads and hang them in a collection container.
- Set a high pump pressure so that the viscous glue is pumped through the system and hardened glue can mostly be rinsed out.
- If only clean adhesive flows out of the hoses, switch off the pump and attach the application heads.
- Screw off the nozzles and repeat step 6 (follow the safety instructions).
- Screw the nozzles back on.
- After the nozzles are heated, your system is ready for use again.

UES AG · Breuershofstr. 48 · 47807 Krefeld · Germany
Tel.: 0049-2151-72950 · Fax: 00049-2151-729578 · info@ues-ag.net · www.ues-ag.net

Position of the sensors of the heating units

Subject to technical changes

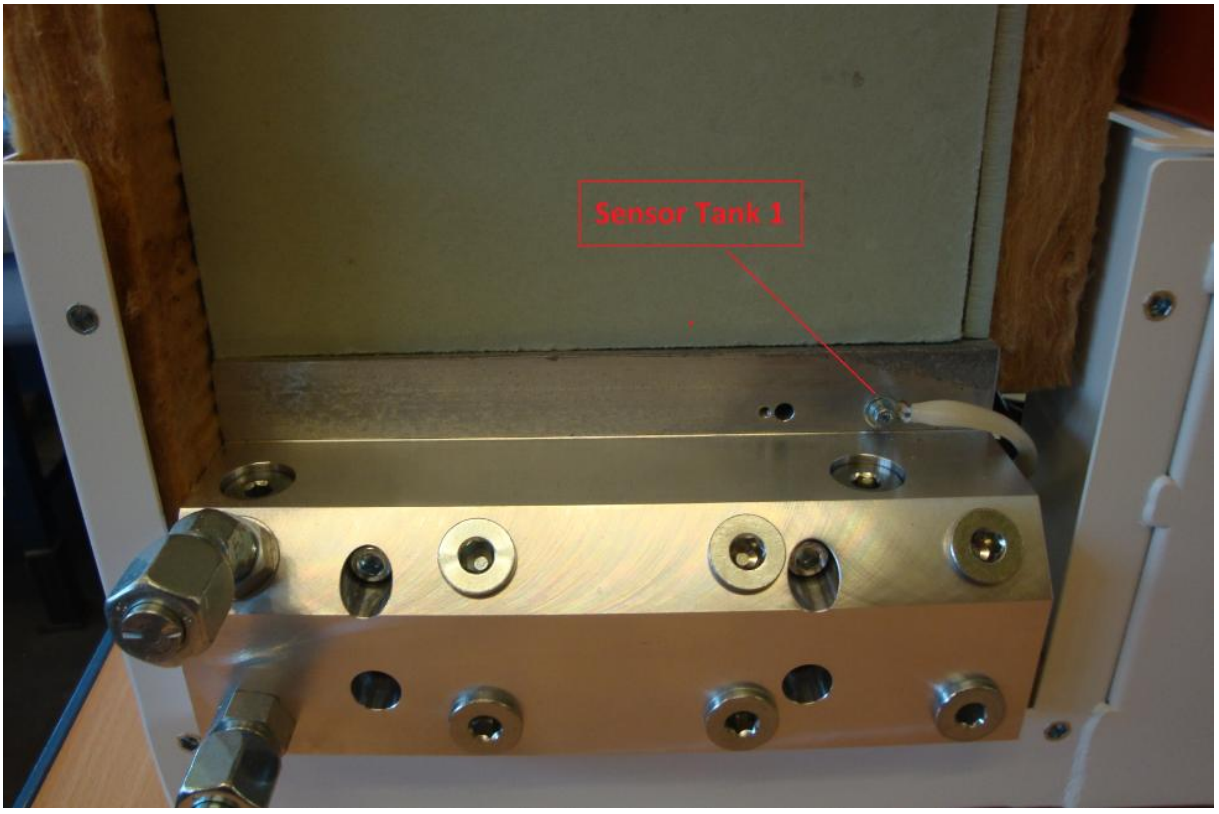

It shows the sensor in the tank – „Tank1“in the display –
accessible from the front = operational side; cable with plug comes out of the insulation

UES AG · Breuershofstr. 48 · 47807 Krefeld · Germany
Tel.: 0049-2151-72950 · Fax: 00049-2151-729578 · info@ues-ag.net · www.ues-ag.net

Position of the sensors of the heating units

Subject to technical changes

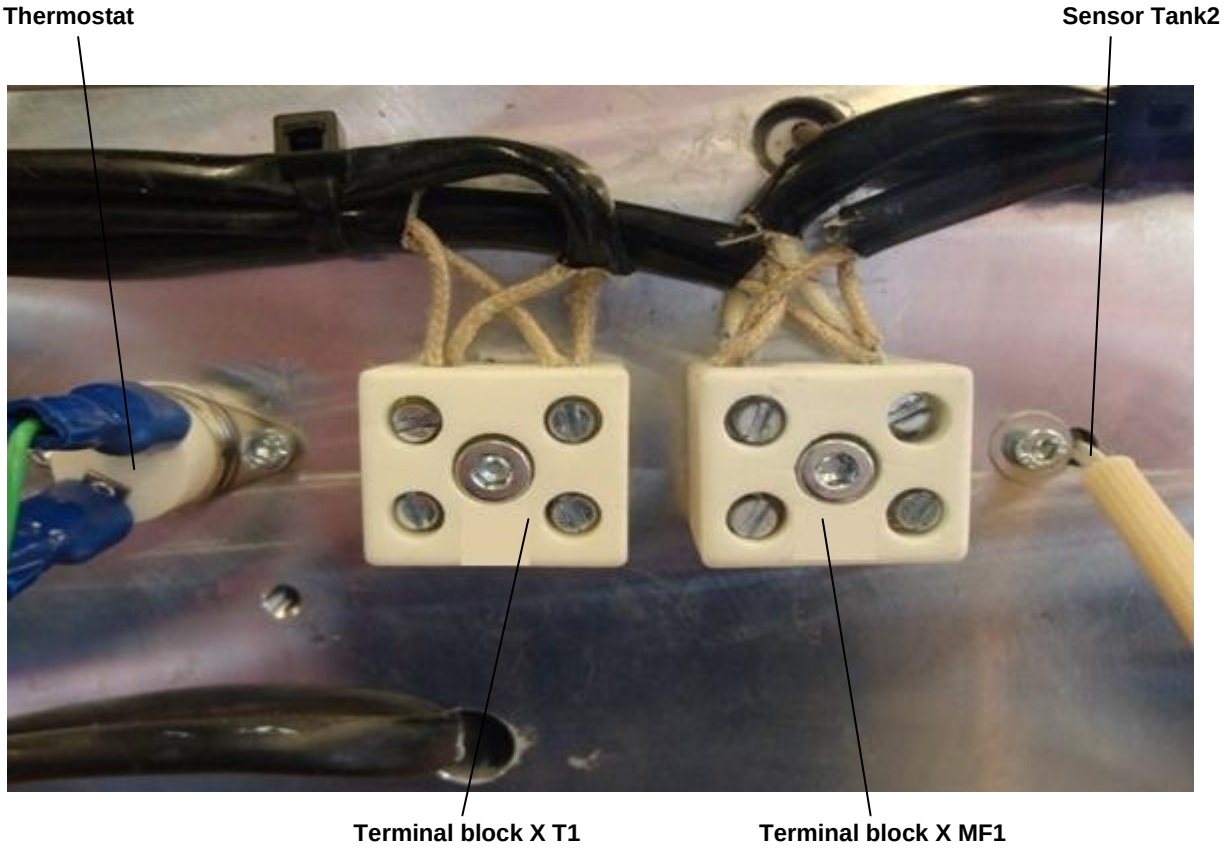

This photo shows the sensor of the manifold – „Tank2“ in the display – accessible from the front side behind the front flap; cable with plug comes out of the insulation

By pressing „Tank“ on the display the display changes between „Tank1“ and „Tank2“. If you set a temperature of e.g. 170 °C for the tank on the display this always refers to „Tank1“ which is the tank.

If you want to set a different temperature for the manifold („Tank2“) – this is done in the menu point „Service“ → „Temperature difference“; this value is pre-set on „0“.

UES AG · Breuershofstr. 48 · 47807 Krefeld · Germany
Tel.: 0049-2151-72950 · Fax: 00049-2151-729578 · info@ues-ag.net · www.ues-ag.net

Mechanical failures

Problem	Possible causes
The pump does not work	• **Pump switched off** • **Set-points not reached yet** • **No external release** • **Wrong position of Auto/Hand switch** • **Tank temperature too low** • **Modules clogged** • **Filter clogged**
The gun administers no glue, even though the valve is active	• **Nozzles are blocked (=>clean)** • **Gun has not reached operating temperature** • **Pump is not working**

Problems with the glue pattern

Problem	Possible cause	Recommended solution
Gluing pattern is wavy or broken	Temperature is too low Pump pressure is too low Glue is too old Draught on the gun and/or environment temperature is too low Nozzle is blocked Nozzle is too big	Increase temperature Increase pump pressure Drain an replace with new glue Cover the gun with a protection, cover and slightly increase temperature of the glue Clean or replace nozzle Replace with smaller nozzle
Glue amount is too high or glue rebounds from substrate	Pump pressure is too high, glue is too hot	Reduce pump pressure, lower the temperature
Glue forms blisters	Temperature is too high Empty tank Humidity in the glue or on the paper	Lower temperature Refill with glue
Glue drops are coming out of the gun nozzles	Needle and/or seat is worn or contaminated	Clean or replace used parts
Repeated blocking of the nozzles	Dried glue in the system (caused by too high a temperature, long standstill periods or contamination of glue storage container)	Clean system, change inline filter and check tank filter, change or clean nozzles search for the cause! (i.e. temperature too high in the tank)

UES AG · Breuershofstr. 48 · 47807 Krefeld · Germany
Tel.: 0049-2151-72950 · Fax: 00049-2151-729578 · info@ues-ag.net · www.ues-ag.net

Socket assignment on UES systems, depending on the model

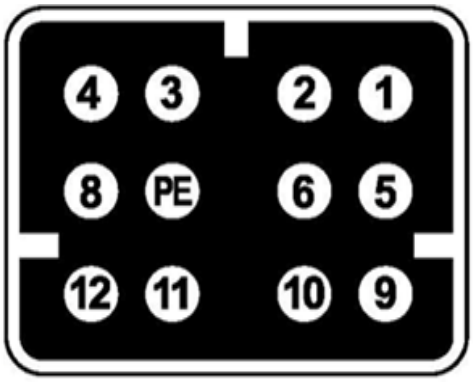

UES Series 3000 (NI120)	
1	Heating head
2	Heating head
3	Sensor head (NI120)
4	Heating hose
5	Sensor hose + head (NI120)
6	Heating hose
PE	Protective conductor
8	Sensor hose (NI120)
9	not assigned
10	not assigned
11	not assigned
12	not assigned

HAN 7 (PT100)	
1	Heating head
2	Heating head
3	Sensor head (PT120)
4	Heating hose
5	Sensor head/hose (PT100)
6	Heating hose
7	Sensor hose (PT100)
8	PE (Protective conductor)

Sensor type set to PT100 in the "Service" menu!

UES AG · Breuershofstr. 48 · 47807 Krefeld · Germany
Tel.: 0049-2151-72950 · Fax: 00049-2151-729578 · info@ues-ag.net · www.ues-ag.net

Replacement parts *exacta*Melt

Item No.	Item description
133966	Bevel gear motor 93.3 rev/min. 0.37 kW
138600	Curved teeth coupling Dm 20 mm to DM 12 mm
106395	Gear pump 7,3 ccm
106396	Gear pump 5,1 ccm
016026	BG tank filter complete
018225	Tank filter sieve
018224	Manifold
000033	Glue nipple long 9/16“-18UNF
100426	Glue nipple 45º 9/16“-18UNF
100439	Blanking plug for hose connector
132743	Heating cartridge 630W/230V, 160 mm
104544	Heating cartridge 630W/230V, 80 mm
002153	Sensor PT100
130399	Thermostat
000833	Pressure limitation valve
133510	Main board
133511	Tank board
133512	Channel board
133513	Toroidal transformer
000543	Frequency converter

UES AG · Breuershofstr. 48 · 47807 Krefeld · Germany
Tel.: 0049-2151-72950 · Fax: 00049-2151-729578 · info@ues-ag.net · www.ues-ag.net

Technical Data

	*exacta***Melt**
Melting rate	ca. 4 l - 30 l/h
Operation temperature	50 °C – 195 °C
Operation pressure	30 bar
Nominal speed of pump	93,3 U/min
Drive power of the pump	0,37 kW
Overtemperature shutdown	Hardware: Thermostat Software: adjustable (max. 205 °C)
Dimensions	566 x 560 x 445 mm (H x B x T)
Weight	ca. 80 kg

Art.-No.	Tank volume	Connectors	Pump volume	Output
151xxx	4 l – 30 l	S3000 o. HAN7	5,1 o. 7,3 ccm/U	ca. 4 l – 30 l/h
	18l	2 x 4 HAN10	7,3 ccm/U	max. 40 l/h
	18l	4 x HAN10	7,3 ccm/U	max. 40 l/h
	18l	2 x UES/S3000	7,3 ccm/U	max. 40 l/h
	18l	2 x UES/S3000	7,3 ccm/U	max. 40 l/h
	18l	4 x UES/S3000	7,3 ccm/U	max. 40 l/h
	18l	4 x UES/S3000	5,1 ccm/U	max. 28 l/h
	18l	2 x UES/S3000	5,1 ccm/U	max. 28 l/h
	25l	4 x HAN10	7,3 ccm/U	max. 40 l/h
	18l			max. 4 l/h

UES AG · Breuershofstr. 48 · 47807 Krefeld · Germany
Tel.: 0049-2151-72950 · Fax: 00049-2151-729578 · info@ues-ag.net · www.ues-ag.net

Recycling

Proper disposal of old electrical devices avoids contamination of the environment and enables valuable materials to be recycled. The main concern is the reduction of harmful substances in electronic products as well as the prevention and reduction of electronic waste through reuse.

According to the WEEE and the ElektroG, manufacturers and importers of electrical equipment are not required to take their marketed devices back from consumers or to recycle the devices after the end of the equipment's life cycle.

However, we, the UES AG, are glad to offer you, as a customer, the service of taking back your old unit.
If the equipment you had acquired from us is irreparably damaged, please feel free to send this to us; we will then recycle it professionally.

For the environment

Your UES Team

UES AG · Breuershofstr. 48 · 47807 Krefeld · Germany
Tel.: 0049-2151-72950 · Fax: 00049-2151-729578 · info@ues-ag.net · www.ues-ag.net

Main board

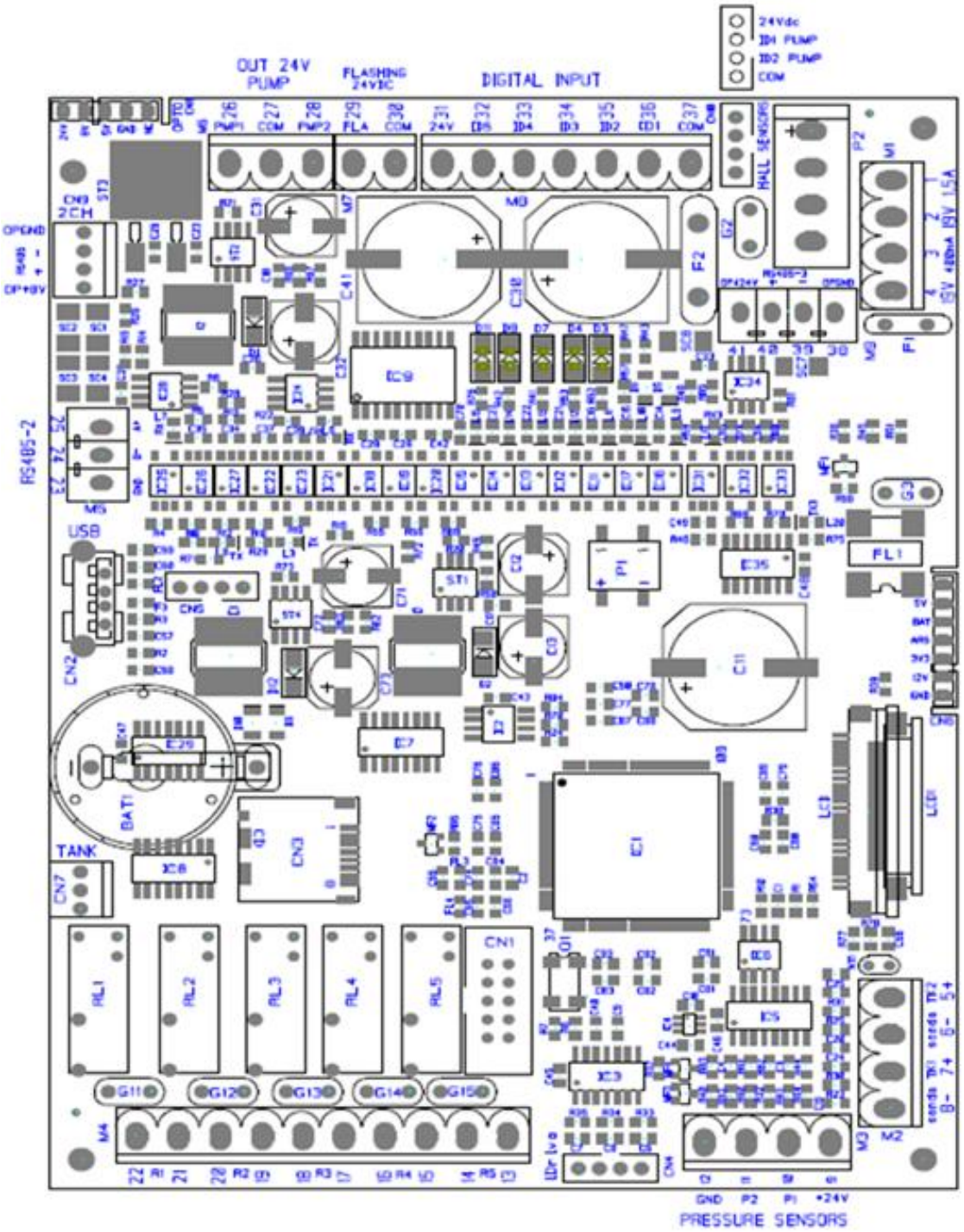

UES AG · Breuershofstr. 48 · 47807 Krefeld · Germany
Tel.: 0049-2151-72950 · Fax: 00049-2151-729578 · info@ues-ag.net · www.ues-ag.net

Mains connection

Connection as a plug-L1-L2-L3-N PE lockable (removable).
The electrical conjunction to the network is made with these connections.

Connecting digital outputs

Connector M4

PIN	DESCRIPTION	
13	Digital OUT	Relay 5 - OPTIONAL
14	Digital OUT	Relay 5 - OPTIONAL
15	Digital OUT	Relay 4 – Alarm for external devices
16	Digital OUT	Relay 4 – Alarm for external devices
17	Digital OUT	Relay 3 – Cut-out temperature
18	Digital OUT	Relay 3 – Cut-out temperature
19	Digital OUT	Relay 2 – Ready signal for external devices
20	Digital OUT	Relay 2 – Ready signal for external devices
21	Digital OUT	Relay 1 - Filler
22	Digital OUT	Relay 1 - Filler

Connecting digital inputs

Connector M8

PIN	DESCRIPTION	
31	Digital Input	OP24Vdc rectified
32	Digital Input	ID5 Glue level sensor
33	Digital Input	ID4 No used now
34	Digital Input	ID3 No used now
35	Digital Input	ID2 Digital standby (Digital signal from mother machine)
36	Digital Input	ID1 Digital start (Digital signal from mother machine)
37	Digital Input	GND Opto Common Input ID (OP24VDC rectified)

UES AG · Breuershofstr. 48 · 47807 Krefeld · Germany
Tel.: 0049-2151-72950 · Fax: 00049-2151-729578 · info@ues-ag.net · www.ues-ag.net

Fuses

The external heaters are connected to the board via plug connections.
Each channel is individually protected. For outlets and fuses, please refer to the table below.

Main fuses			**Fuse**
L1			F1
L2			F2
L3			F3
24 Volt control circuit			F4
Channel			**Fuse**
2 Channel Board 1			
Hose 1			F2
Head 1			F4
Hose 2			F1
Head 2			F3
2 Channel Board 2			
Hose 3			F2
Head 3			F4
Hose 4			F1
Head 4			F3
2 Channel Board 3			
Hose 5			F2
Head 5			F4
Hose 6			F1
Head 6			F3
2 Channel Board 4			
Hose 7			F2
Head 7			F4
Hose 8			F1
Head 8			F3
Internal heating tank board			
Tank 1			TK F1
Manifold			PTK F2

Thermostat and fuse

The system has an over-temperature shutdown feature with a thermostat.
This safety circuit is connected to the board.
Intake plug for thermostat: Thermostats

UES AG · Breuershofstr. 48 · 47807 Krefeld · Germany
Tel.: 0049-2151-72950 · Fax: 00049-2151-729578 · info@ues-ag.net · www.ues-ag.net

Technical data

	*exacta***Melt 4kg / 8kg**	*exacta***Melt 14kg**
Housing protection type	IP 53 dust proof control box	
Ambient temperature	5 °C – 45 °C	5 °C – 45 °C
Glue pumpe(s) [1]	Gear	Gear
Pressure relief	successively	successively
min. air pressure storage	4 bar	4 bar
Working area pump	0 – 90 U/min	0 – 90 U/min
Tank size ca.	4 l / 8l	14 l
Conveying capacity [5]	max 50 l/h	max 50 l/h
Viscosity range MaxPas [6]	max. 20	max. 20
Operating temperature	50 °C – 195 °C	
Over-temperature off switch	Hardware: Thermostat Software: adjustable	
Temperature sensor	Unit: PT 100 External heating: switchable PT 100 / NI120/ NTC / FeCu	
Control accuracy	+ / - 1 °C	
Heating (unit)	2 heat zones, tank (T1) and distribution block (T2)	
Heating (external)	(2 hoses + 2 heads) (4 hoses + 4 heads) (6 hoses + 6 heads) (7 hoses + 7 heads) (8 hoses + 8 heads)	

1. [1] Pump type: Gear pump
2. [4] The melting power depends on the glue. (Provided with XP2505 at 150 °C)
3. [5] The conveying capacity depends on the glue. (Provided with XP2505 at 150 °C)
4. [6] The characteristics of the system performance depend on the viscosity of the glue.
5. [7] The conveying capacity depends on the pump and on the tank size that are used.

UES AG · Breuershofstr. 48 · 47807 Krefeld · Germany
Tel.: 0049-2151-72950 · Fax: 00049-2151-729578 · info@ues-ag.net · www.ues-ag.net

	*exacta***Melt 20 kg**	*exacta***Melt 30 kg**
Housing protection type	IP 53 dust proof control box	
Ambient temperature	5 °C – 45 °C	5 °C – 45 °C
Glue pumpe(s) [1]	Gear	Gear
Pressure relief	successively	successively
min. air pressure storage	4 bar	4 bar
Working area pump	0 – 90 U/min	0 – 90 U/min
Tank size ca.	4 l / 8l	14 l
Conveying capacity [5]	max 50 l/h	max 50 l/h
Viscosity range MaxPas [6]	max. 20	max. 20
Operating temperature	50 °C – 195 °C	
Over-temperature off switch	Hardware: Thermostat Software: adjustable	
Temperature sensor	Unit: PT 100 Externe Heizungen: umschaltbar PT 100 / NI120/ NTC / FeCu	
Control accuracy	+ / - 1 °C	
Heating (unit)	2 heat zones, tank (T1) and distribution block (T2)	
Heating (external)	(2 hoses + 2 heads) (4 hoses + 4 heads) (6 hoses + 6 heads) (7 hoses + 7 heads) (8 hoses + 8 heads)	

6. [1] Pump type: Gear pump
7. [4] The melting power depends on the glue. (Provided with XP2505 at 150 °C)
8. [5] The conveying capacity depends on the glue. (Provided with XP2505 at 150 °C)
9. [6] The characteristics of the system performance depend on the viscosity of the glue.
10. [7] The conveying capacity depends on the pump and on the tank size that are used.

UES AG · Breuershofstr. 48 · 47807 Krefeld · Germany
Tel.: 0049-2151-72950 · Fax: 00049-2151-729578 · info@ues-ag.net · www.ues-ag.net

Electrical data

	*exacta***Melt 4kg /8kg**	*exacta***Melt 14kg**
Operating volting	400 V, 3L/N/PE	400 V, 3L/N/PE
Permissible voltage deviation	+/- 10 %	+/- 10 %
Preliminary fuse max.	3 x 16 A	3 x 16 A
Frequency range	50/60Hz	50/60Hz
Connected load 1 min. (system)	2290 W / 2800 W	6000 W
Connected load 1 min. (system + S + K external)	1000 W per channel	1000 W per channel
Preliminary fuse tank manifold	8A	8A
Preliminary fuse hose / head	5A	5A
Preliminary fuse L1,L2,L3	10A	16A
Preliminary fuse control board	2A	2A

	*exacta***Melt 20kg**	*exacta***Melt 30kg**
Operating volting	400 V, 3L/N/PE	400 V, 3L/N/PE
Permissible voltage deviation	+/- 10 %	+/- 10 %
Preliminary fuse max.	3 x 16 A	3 x 16 A
Frequency range	50/60Hz	50/60Hz
Connected load 1 min. (system)	6300 W	6930 W
Connected load 1 min. (system + S + K external)	1000 W per channel	1000 W per channel
Preliminary fuse tank manifold	8A	8A
Preliminary fuse hose / head	5A	5A
Preliminary fuse L1,L2,L3	16A	16A
Preliminary fuse control board	2A	2A

The actual power input is determined by the consumers connected to the *exacta***Melt system.**

UES AG · Breuershofstr. 48 · 47807 Krefeld · Germany
Tel.: 0049-2151-72950 · Fax: 00049-2151-729578 · info@ues-ag.net · www.ues-ag.net

Main board item 133510

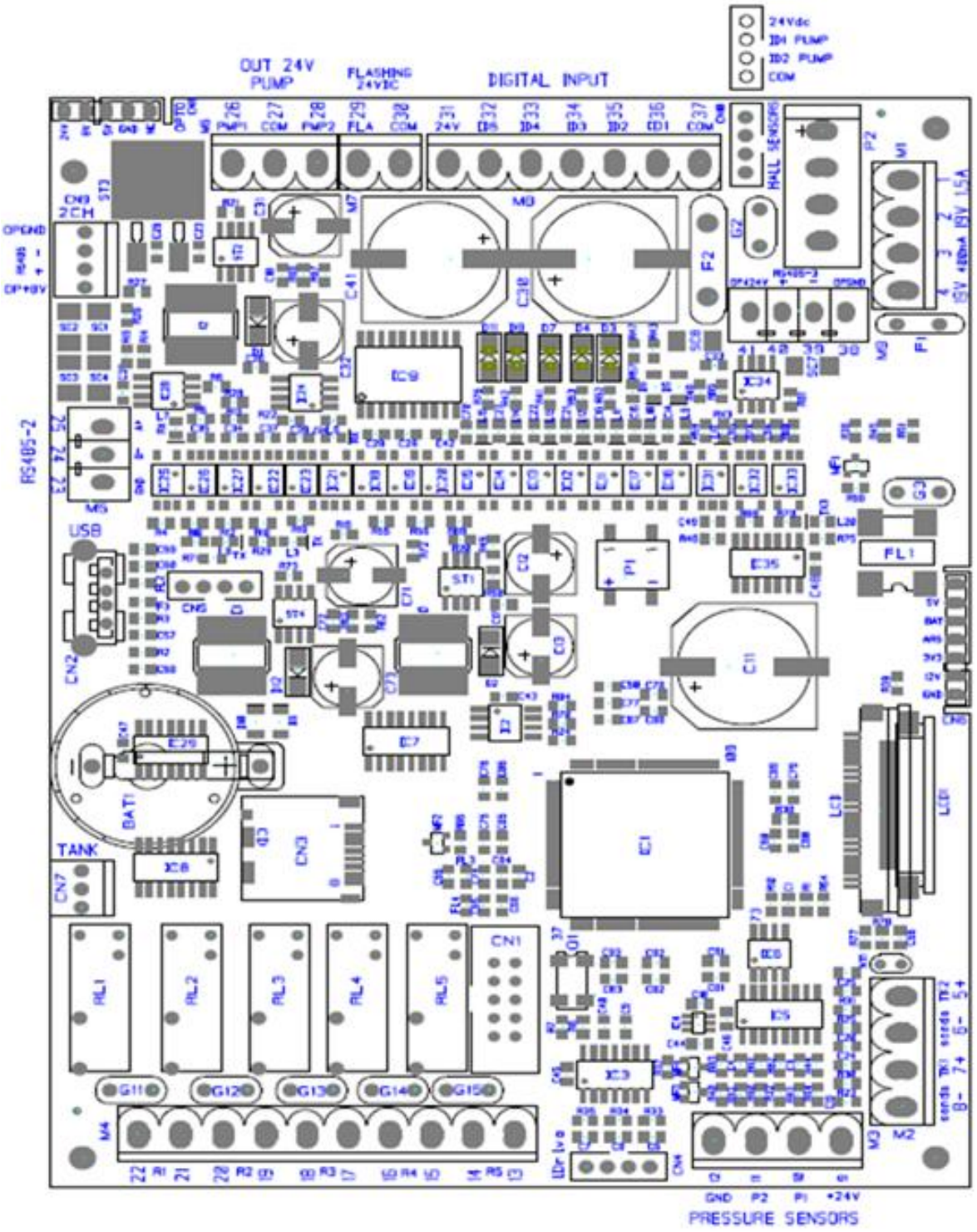

UES AG · Breuershofstr. 48 · 47807 Krefeld · Germany
Tel.: 0049-2151-72950 · Fax: 00049-2151-729578 · info@ues-ag.net · www.ues-ag.net

Pin assignment (main board)

Connector M1

PIN	DESCRIPTION	
1	Power supply	Pwr (19Vac 1,5A) for Opto
2	Power supply	Pwr (19Vac 1,5A) for Opto
3	Power supply	Pwr (19Vac 0,5A) for Micro
4	Power supply	Pwr (19Vac 0,5A) for Micro

Connector M2

PIN	DESCRIPTION	
5	An.In.1	PT100 1 Tank input
6	An.In.1	PT100 1
7	An.In.2	PT100 2 Manifold input
8	An.In.2	PT100 2

Connector M3

PIN	DESCRIPTION	
9	An.In.1	Power supply 24Vdc – Pressure sensor 0-10Vdc
10	An.In.1	Signal 1 - Pressure sensor 0-10Vdc
11	An.In.2	Signal 2 - Pressure sensor 0-10Vdc - OPTIONAL
12	An.In.2	Power supply 0Vdc - Pressure sensor 0-10Vdc

Connector M4

PIN	DESCRIPTION	
13	Digital OUT	Relay 5 - OPTIONAL
14	Digital OUT	Relay 5 - OPTIONAL
15	Digital OUT	Relay 4 – Alarm for external devices
16	Digital OUT	Relay 4 – Alarm for external devices
17	Digital OUT	Relay 3 – Cut-out temperature
18	Digital OUT	Relay 3 – Cut-out temperature
19	Digital OUT	Relay 2 – Ready signal for external devices
20	Digital OUT	Relay 2 – Ready signal for external devices
21	Digital OUT	Relay 1 - Filler
22	Digital OUT	Relay 1 - Filler

Connector M5

PIN	DESCRIPTION	
23	RS485-opto	OPGND
24	RS485-opt	- RS485-2 For inverter device
25	RS485-opto	+ RS485-2 For inverter device

UES AG · Breuershofstr. 48 · 47807 Krefeld · Germany
Tel.: 0049-2151-72950 · Fax: 00049-2151-729578 · info@ues-ag.net · www.ues-ag.net

Connector M6

PIN	DESCRIPTION	
26	Digital OUT	Pump 1 (OUT OP24Vdc)
27	Digital OUT	OPGND
28	Digital OUT	Pump 2 (OUT OP24Vdc)

Connector M7

PIN	DESCRIPTION	
29	Digital OUT	Flashing lamp or generic OUT (OUT OP24Vdc)
30	Digital OUT	OPGND

Connector M8

PIN	DESCRIPTION	
31	Digital Input	OP24Vdc rectified
32	Digital Input	ID5 Glue level sensor
33	Digital Input	ID4 No used now
34	Digital Input	ID3 No used now
35	Digital Input	ID2 Digital standby (Digital signal from mother machine)
36	Digital Input	ID1 Digital start (Digital signal from mother machine)
37	Digital Input	GND Opto Common Input ID (OP24VDC rectified)

Connector M9

PIN	DESCRIPTION	
38	RS485-opto	OPGND
39	RS485-opto	- RS485-3 For external device (example SSP)
40	RS485-opto	+ RS485-3 For external device (example SSP)
41	RS485-opto	OP + 24Vdc

Connector CN4
I-Drive Connector (Rotary switch) (4 position)

Connector CN7
Tank Power Board connection (3 position) // Tank1 – Tank2 – 24Vdc rectified

Connector CN9
Hose and Gun Power Board connection (4 position) // OP8V RS485+ RS485- OPGND

Connector CN10
Piston pump input connection (4 position) // OP24V-ID sensor switch 1-ID sensor switch 2 - OPGND

UES AG · Breuershofstr. 48 · 47807 Krefeld · Germany
Tel.: 0049-2151-72950 · Fax: 00049-2151-729578 · info@ues-ag.net · www.ues-ag.net

Tank board item 133511

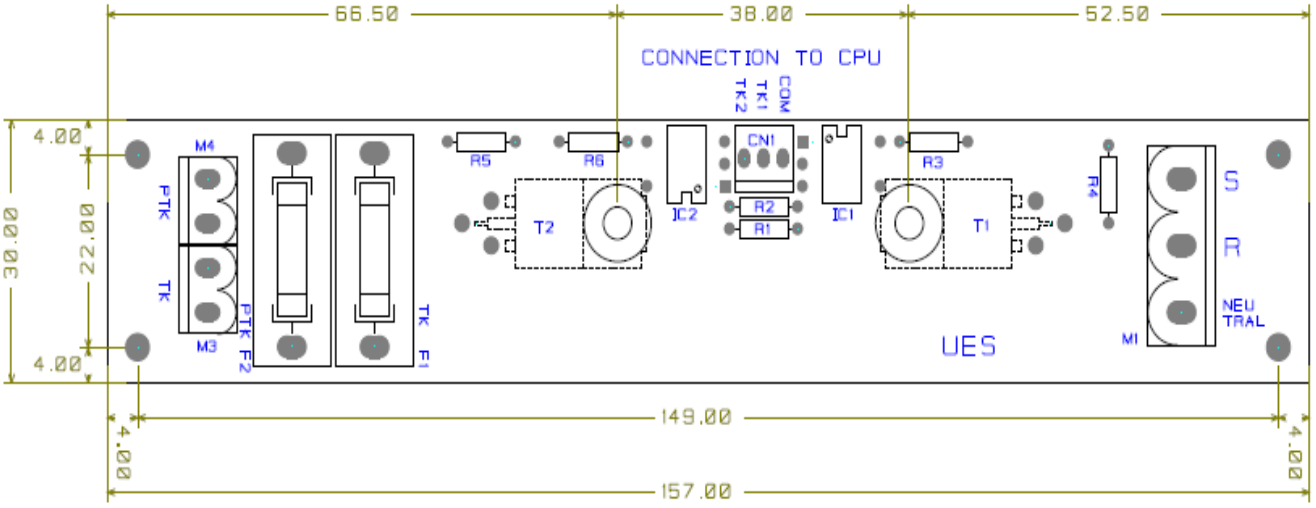

Pin assignment (tank board)

Connector M1

PIN	DESCRIPTION	
S	Power supply	S Phase
R	Power supply	R Phase
NE	Power supply	NEUTRAL

Connector M3 + M4

PIN	DESCRIPTION	
1	TK	Out tank
2	TK	NEUTRAL
3	PTK	Out manifold
4	PTK	NEUTRAL

Connector CN1

PIN	DESCRIPTION	
1	UES connect	Common
2	UES connect	Driver out TK
3	UES connect	Driver out manifold

Connect terminal CN1 (tank board) with CN7 (main board).

UES AG · Breuershofstr. 48 · 47807 Krefeld · Germany
Tel.: 0049-2151-72950 · Fax: 00049-2151-729578 · info@ues-ag.net · www.ues-ag.net

2-Channel board item 133512

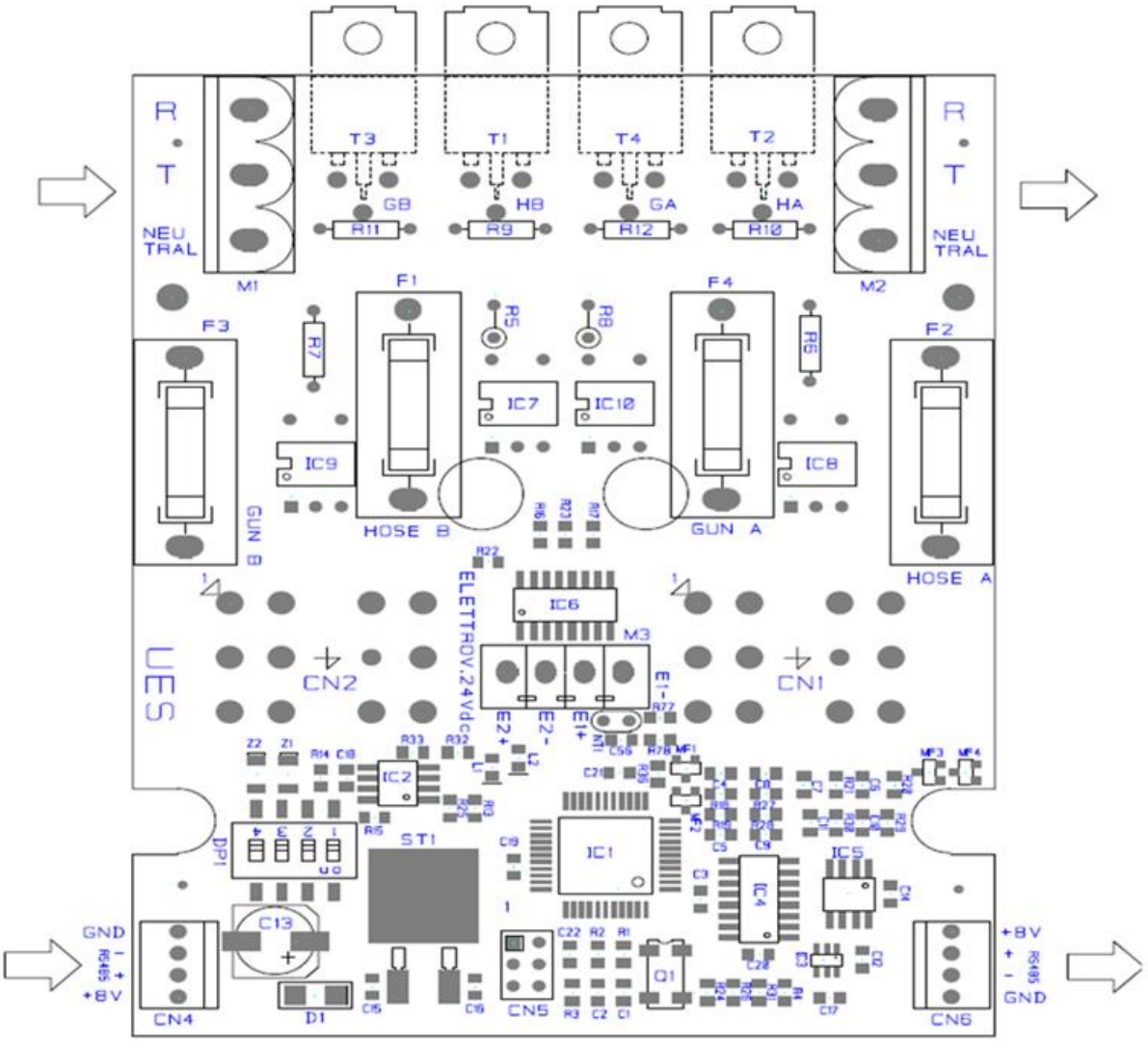

Caution!

Please note that the number of channel boards depends on your type of system.
Find out what type of system you have purchased.

2 Hose system = 1 channel board
4 Hose system = 2 channel boards
6 Hose system = 3 channel boards
8 Hose system = 4 channel boards

UES AG · Breuershofstr. 48 · 47807 Krefeld · Germany
Tel.: 0049-2151-72950 · Fax: 00049-2151-729578 · info@ues-ag.net · www.ues-ag.net

Pin assignment (2-channel board)

Connector M1

PIN	DESCRIPTION	
Ne	Power supply	NEUTRAL
T	Power supply	T Phase
R	Power supply	R Phase

Connector M2

PIN	DESCRIPTION	
R	Power supply	R Phase
T	Power supply	T Phase
NE	Power supply	NEUTRAL

Connector M3

PIN	DESCRIPTION	
E1-	Out	Electrovalve gun 1-
E1+	Out	Electrovalve gun 1+
E2-	Out	Electrovalve gun 2-
E2+	Out	Electrovalve gun 2+

Connector CN1

PIN	DESCRIPTION	
1	UES Connect	Out gun A
2	UES Connect	NEUTRAL (for out gun A)
3	UES Connect	PT100 gun A
4	UES Connect	NEUTRAL (for out hose A)
5	UES Connect	GND (for PT100 gun A)
6	UES Connect	Out hose A
7	UES Connect	GROUND
8	UES Connect	PT100 hose A
9	UES Connect	GND (for PT100 hose A)
10	UES Connect	Not connected
11	UES Connect	Out electrovalve 1+
12	UES Connect	Out electrovalve 1-

UES AG · Breuershofstr. 48 · 47807 Krefeld · Germany
Tel.: 0049-2151-72950 · Fax: 00049-2151-729578 · info@ues-ag.net · www.ues-ag.net

Connector CN2

PIN	DESCRIPTION	
1	UES Connect	Out gun B
2	UES Connect	NEUTRAL (for out gun B)
3	UES Connect	PT100 gun B
4	UES Connect	NEUTRAL (for out hose B)
5	UES Connect	GND (for PT100 gun B)
6	UES Connect	Out hose B
7	UES Connect	GROUND
8	UES Connect	PT100 hose B
9	UES Connect	GND (for PT100 hose B)
10	UES Connect	Not connected
11	UES Connect	Out electrovalve 2+
12	UES Connect	Out electrovalve 2-

Connector CN4

PIN	DESCRIPTION	
1	Alim-RS485	+8Volt
2	Alim-RS485	+RS485
3	Alim-RS485	-RS485
4	Alim-RS485	0Volt (GND)

Connector CN5

PIN	DESCRIPTION	
1	Alim-RS485	+8Volt
2	Alim-RS485	+RS485
3	Alim-RS485	-RS485
4	Alim-RS485	0Volt (GND)

CN4 and CN5 have the same pin assignment.

Board 1 B → channel 1;
Board 1 A → channel 2.
Board 2 B → channel 3;
Board 2 A → channel 4.

UES AG · Breuershofstr. 48 · 47807 Krefeld · Germany
Tel.: 0049-2151-72950 · Fax: 00049-2151-729578 · info@ues-ag.net · www.ues-ag.net

Connection scheme

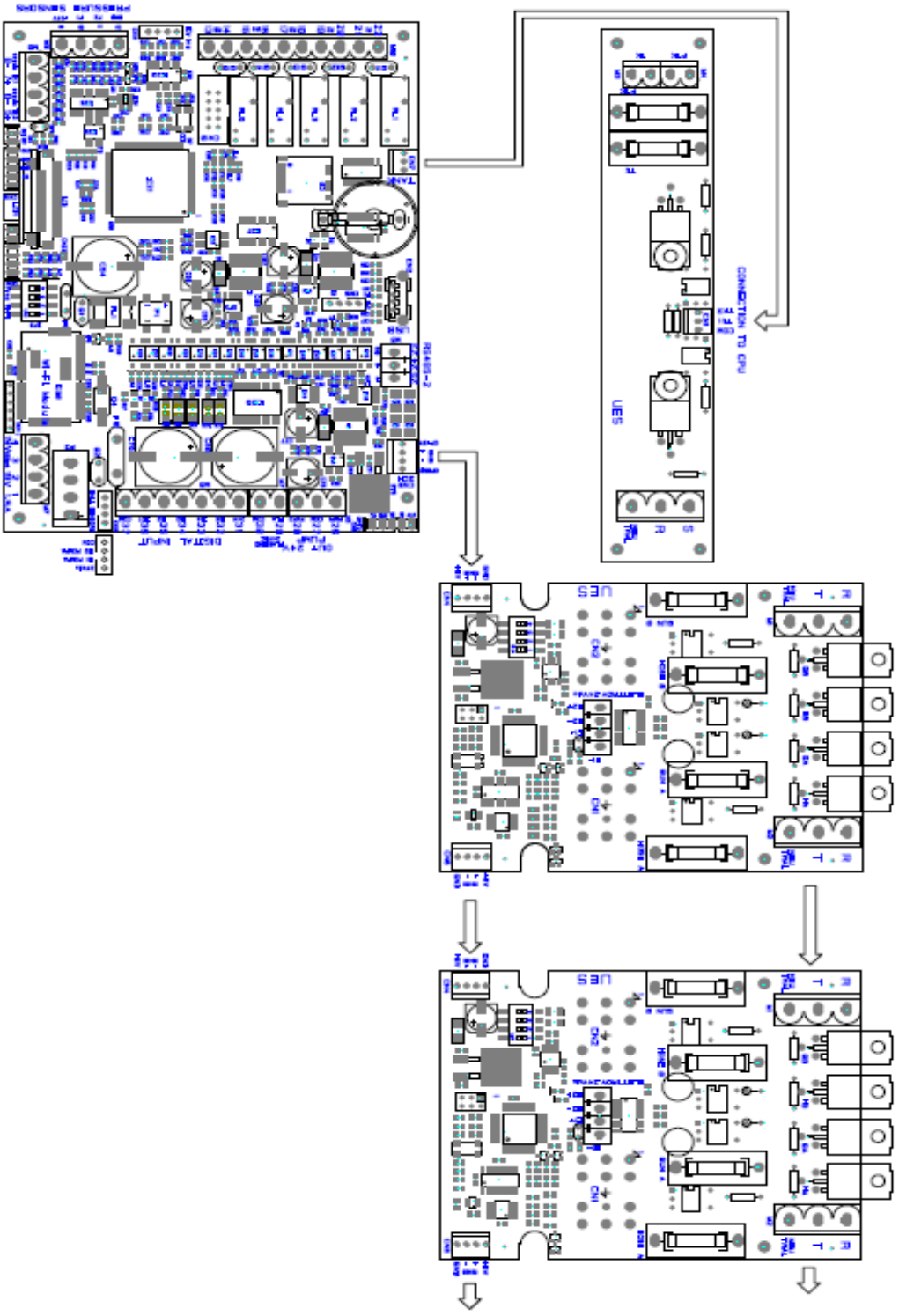

UES AG · Breuershofstr. 48 · 47807 Krefeld · Germany
Tel.: 0049-2151-72950 · Fax: 00049-2151-729578 · info@ues-ag.net · www.ues-ag.net

Electric circiut plan

UES AG · Breuershofstr. 48 · 47807 Krefeld · Germany
Tel.: 0049-2151-72950 · Fax: 00049-2151-729578 · info@ues-ag.net · www.ues-ag.net

UES AG · Breuershofstr. 48 · 47807 Krefeld · Germany
Tel.: 0049-2151-72950 · Fax: 00049-2151-729578 · info@ues-ag.net · www.ues-ag.net

EC Installation Declaration according to Machinery Directive 20061421EG Annex II 1.B

The manufacturer / distributor

UES AG
Breuershofstr. 48
47807 Krefeld
Germany

hereby declares that the following product

Product description:	***exacta*Melt**				
Make:	4 kg / 8 kg / 14 kg / 20 kg / 30 kg				
Model/type description:	150042	150082	150142	150202	150302
	150044	150084	150144	150204	150304
	150046	150086	150146	150206	150306
	150048	150088	150148	150208	150308
				150284	150314
				150286	150342
Description:	**UES tank system *exacta*Melt**				

corresponds to the following essential requirements of the Directive:
see Annex "List of requirements met according to Annex I of EC Machinery Directive 2006/42/EC"

The following additional EU directives have been applied:
EMC Directive 2004/108/EG
Low Voltage Directive 2006/95/EG

The safety objectives of EC Directive 2006/95/EC as well as those of DIN VDE 0100 have been met.

The commissioning of this product is prohibited until the machine or system into which this product is to be incorporated or of which it represents a component complies with the provisions of all relevant guidelines.

UES AG · Breuershofstr. 48 · 47807 Krefeld · Germany
Tel.: 0049-2151-72950 · Fax: 00049-2151-729578 · info@ues-ag.net · www.ues-ag.net

The following harmonised standards have been applied:

EN 55011:2009/A1:2010	Industrial, scientific and medical equipment – Radio disturbance– Value limits and methods of measurement (CISPR 11:2009/A1:2010)
EN 60204-1:2006/A1:2009	Machinery safety – Electrical equipment of machines – Part 1: General requirements (IEC 60204-1:2005/A1:2008)
EN 60204-1:2006/AC:2010	Machinery safety – Electrical equipment of machines – Part 1: General requirements (IEC 60204-1:2005 [modified])
EN 60204-1:2006	Machinery safety – Electrical equipment of machines – Part 1: General requirements (IEC 60204-1:2005 [modified])
EN 61000-6-2:2005/AC:2005	Electromagnetic compatibility (EMC) – Part 6-2: Generic standards – Immunity for industrial environments (IEC 61000-6-2:2005)
EN 61000-6-2:2005	Electromagnetic compatibility (EMC) – Part 6-2: Generic standards – Immunity for industrial environments (IEC 61000-6-2:2005)
EN 61000-6-4:2007/A1:2011	Electromagnetic compatibility (EMC) – Part 6-4: Generic standards – Interference emission for industrial environments (IEC 61000-6-4:2006/A1:2010)
EN 61000-6-4:2007	Electromagnetic compatibility (EMC) – Part 6-4: Generic standards – Interference emission for industrial environments (IEC 61000-6-4:2006)
EN 61310-2:2008	Machinery safety – Displays, labelling and service – Part 2: Labelling requirements (IEC 61310-2:2007)
EN 809:1998+A1:2009/AC:2010	Pumps and pump units for liquids – Common safety requirements
EN 809:1998+A1:2009	Pumps and pump units for liquids – Common safety requirements
EN ISO 12100:2010	Safety of machinery – General principles for design – Risk assessment and risk reduction (ISO 12100:2010)
EN ISO 13732-1:2008	Ergonomics of the thermal environment – Assessment procedure for human responses in the case of contact with surfaces – Part 1: Hot surfaces (ISO 13732-1:2006)
EN ISO 4413:2010	Fluid power technology – General rules and safety requirements for hydraulic systems and their components (ISO 4413:2010)
EN ISO 4414:2010	Fluid power technology – General rules and safety requirements for pneumatic systems and their components (ISO 4414:2010)

UES AG · Breuershofstr. 48 · 47807 Krefeld · Germany
Tel.: 0049-2151-72950 · Fax: 00049-2151-729578 · info@ues-ag.net · www.ues-ag.net

The special technical documents for the product have been prepared in accordance with Annex VII, Part B; upon reasonable request, these documents can be sent to a national authority by mail.

Name and address of the person who is authorised to compile the technical documentation:

Andreas Ripke, Breuershofstr. 48, 47807 Krefeld, Germany

Laurent Framery
Signature CEO

Andreas Ripke
Signature CE coordinator

UES AG · Breuershofstr. 48 · 47807 Krefeld · Germany
Tel.: 0049-2151-72950 · Fax: 00049-2151-729578 · info@ues-ag.net · www.ues-ag.net

UES AG
Breuershofstr. 48
47807 Krefeld
Germany
Tel. 0049-2151-72 95 0
Fax 0049-2151-72 95 78
info@ues-ag.net
www.ues-ag.net